Deutsches Institut für Bautechnik DIBt

Member of EOTA
www.eota.eu

Approval body for construction products and types of construction

Bautechnisches Prüfamt

An institution established by the Federal and Laender Governments

Designated according to Article 29 of Regulation (EU) No 305/2011 and member of EOTA (European Organisation for Technical Assessment)

European Technical Assessment

ETA-21/0267 of 27 August 2021

English translation prepared by DIBt - Original version in German language

General Part

Technical Assessment Body issuing the European Technical Assessment:	Deutsches Institut für Bautechnik
Trade name of the construction product	fischer Injection system FIS V Zero for use in masonry
Product family to which the construction product belongs	Metal Injection anchors for use in masonry
Manufacturer	fischerwerke GmbH & Co. KG Otto-Hahn-Straße 15 79211 Denzlingen DEUTSCHLAND
Manufacturing plant	fischerwerke
This European Technical Assessment contains	40 pages including 3 annexes which form an integral part of this assessment
This European Technical Assessment is issued in accordance with Regulation (EU) No 305/2011, on the basis of	EAD 330076-01-0604, Edition 05/2021

Electronic copy of the ETA by DIBt: ETA-21/0267

Deutsches Institut für Bautechnik
Kolonnenstraße 30 B | 10829 Berlin | GERMANY | Phone: +49 30 78730-0 | Fax: +49 30 78730-320 | Email: dibt@dibt.de | www.dibt.de

The European Technical Assessment is issued by the Technical Assessment Body in its official language. Translations of this European Technical Assessment in other languages shall fully correspond to the original issued document and shall be identified as such.

Communication of this European Technical Assessment, including transmission by electronic means, shall be in full. However, partial reproduction may only be made with the written consent of the issuing Technical Assessment Body. Any partial reproduction shall be identified as such.

This European Technical Assessment may be withdrawn by the issuing Technical Assessment Body, in particular pursuant to information by the Commission in accordance with Article 25(3) of Regulation (EU) No 305/2011.

Electronic copy of the ETA by DIBt: ETA-21/0267

Specific Part

1 Technical description of the product

The fischer injection system FIS V Zero for masonry is a bonded anchor (injection type) consisting of a mortar cartridge with injection mortar fischer FIS V Zero, a perforated sleeve and an anchor rod with hexagon nut and washer or an internal threaded rod. The steel elements are made of zinc coated steel, stainless steel or high corrosion resistant steel.

The anchor rod is placed into a drilled hole filled with injection mortar and is anchored via the bond between steel element, injection mortar and masonry and mechanical interlock.

The product description is given in Annex A.

2 Specification of the intended use in accordance with the applicable European Assessment Document

The performances given in Section 3 are only valid if the anchor is used in compliance with the specifications and conditions given in Annex B.

The verifications and assessment methods on which this European Technical Assessment is based lead to the assumption of a working life of the anchor of at least 50 years. The indications given on the working life cannot be interpreted as a guarantee given by the producer, but are to be regarded only as a means for choosing the right products in relation to the expected economically reasonable working life of the works.

3 Performance of the product and references to the methods used for its assessment

3.1 Mechanical resistance and stability (BWR 1)

Essential characteristic	Performance
Characteristic resistance to steel failure of a single anchor under tension loading	See Annexes C 1 and C 3
Characteristic resistance to steel failure of a single anchor under shear loading with and without lever arm	See Annex C 2 and C 3
Characteristic resistance to pull-out failure or brick breakout failure of a single anchor under tension loading, Reduction factor	See Annex C 5, C 7, C 10, C 13, C 15 and C 16
Characteristic resistance to local brick failure or brick edge failure of a single anchor under shear loading	See Annex C 5, C 7, C 11, C 13 and C 15
Characteristic resistance to brick breakout failure of an anchor group under tension loading	See Annex B 13, B 14, C 4, C 6, C 8, C 9, C 12 and C 14
Characteristic resistance to local brick failure or brick edge failure of an anchor group under shear loading	See Annex B 13, B 14, C 4, C 6, C 8, C 9, C 12 and C 14
Edge distances, spacing, member thickness	See Annex B 2, B 13, C 4, C 6, C 8, C 9, C 12 and C 14
Displacements under tension and shear loading	See Annex C 17
Maximum installation torque	See Annex C 4, C 6, C 8, C 9, C 12 and C 14

Electronic copy of the ETA by DIBt: ETA-21/0267

3.2 Safety in case of fire (BWR 2)

Essential characteristic	Performance
Reaction to fire	Class A1
Resistance to fire under tension and shear loading with and without lever arm, minimum edge distances and spacing	No performance assessed

3.3 Hygiene, health and the environment (BWR 3)

Essential characteristic	Performance
Content, emission and/or release of dangerous substances	No performance assessed

4 Assessment and verification of constancy of performance (AVCP) system applied, with reference to its legal base

In accordance with the European Assessment Document EAD 330076-01-0604 the applicable European legal act is: [97/177/EC].

The system to be applied is: 1

5 Technical details necessary for the implementation of the AVCP system, as provided for in the applicable European Assessment Document

Technical details necessary for the implementation of the AVCP system are laid down in the control plan deposited at Deutsches Institut für Bautechnik.

Issued in Berlin on 27 August 2021 by Deutsches Institut für Bautechnik

Dipl.-Ing. Beatrix Wittstock
Head of Section

beglaubigt:
Baderschneider

Electronic copy of the ETA by DIBt: ETA-21/0267

Installation conditions part 1

Anchor rods with perforated sleeve FIS H K; Installation in perforated and solid brick masonry

Pre-positioned installation:

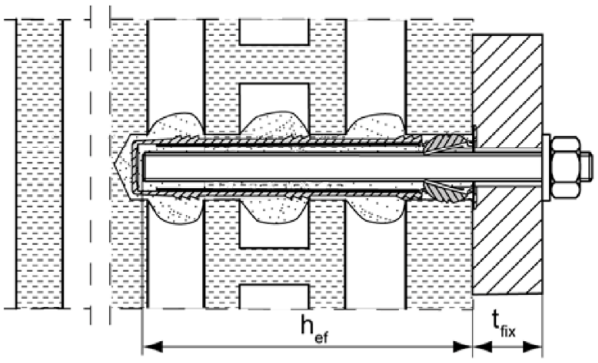

Installation with render bridge

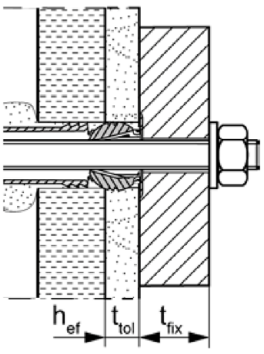

Size of the perforated sleeve: FIS H 12x50 K, FIS H 12x85 K, FIS H 16x85 K, FIS H 16x130 K, FIS H 20x85 K, FIS H 20x130 K

Push through installation:

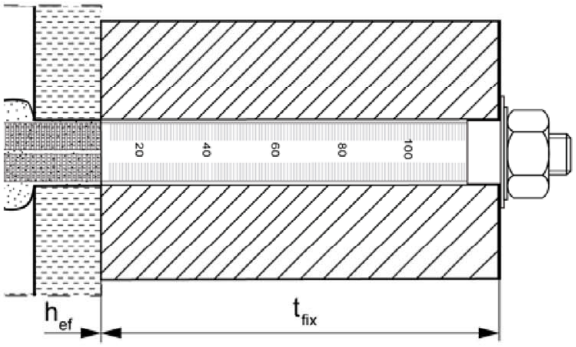

Installation with render bridge

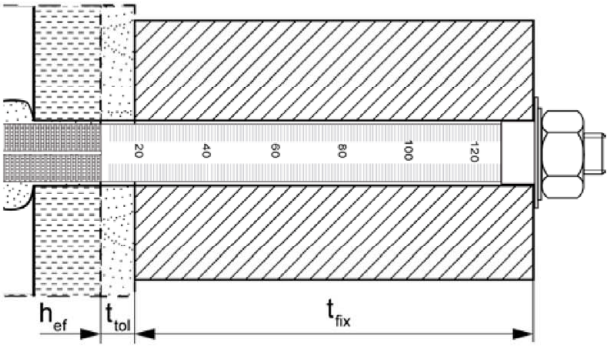

Size of the perforated sleeve: FIS H 18x130/200 K, FIS H 22x130/200 K

Internal threaded anchor FIS E with perforated sleeve FIS H K; Installation in perforated and solid brick masonry

Pre-positioned installation:

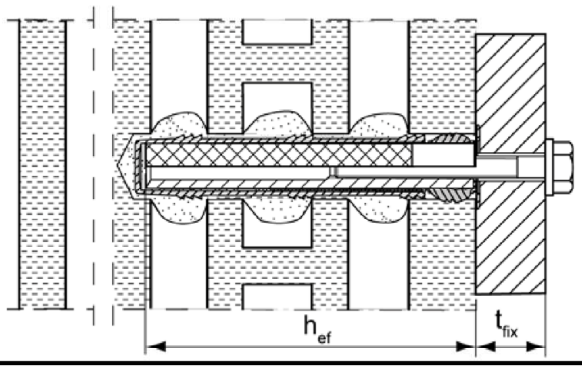

Installation with render bridge

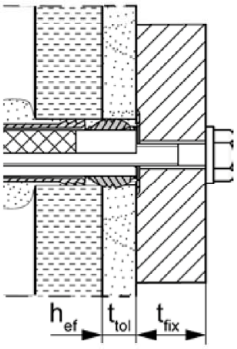

Figures not to scale

h_{ef} = effective embedment depth

t_{fix} = thickness of fixture

t_{tol} = thickness of unbearing layer (e.g. plaster)

fischer injection system FIS V Zero for masonry

Product description
Installation conditions part 1,
Anchor rods and internal threaded anchor with perforated sleeve

Annex A 1

Electronic copy of the ETA by DIBt: ETA-21/0267

Installation conditions part 2

Anchor rods without perforated sleeve FIS H K; installation in solid brick masonry

Pre-positioned installation:

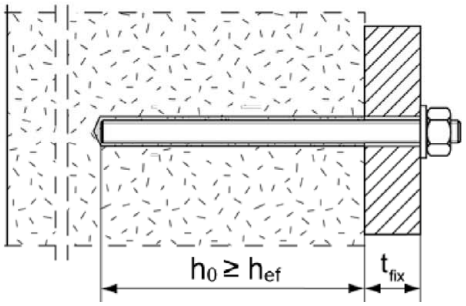

Push through installation: Annular gap filled with mortar

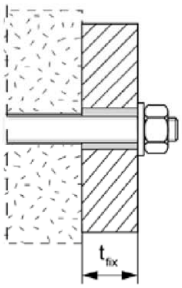

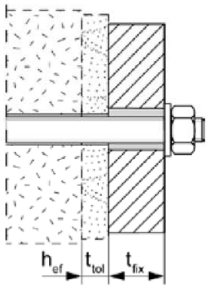

Installation with render bridge

Internal threaded anchors FIS E without perforated sleeve FIS H K; installation in solid brick masonry

Pre-positioned installation:

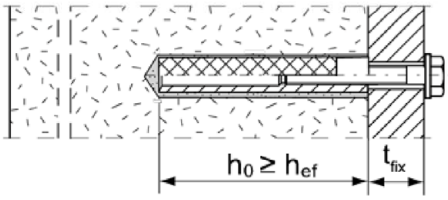

Installation with render bridge

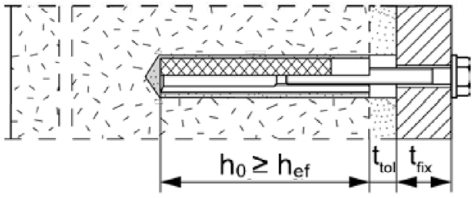

Figures not to scale

h_0 = depth of drill hole

h_{ef} = effective embedment depth

t_{tol} = thickness of unbearing layer (e.g. plaster)

t_{fix} = thickness of fixture

fischer injection system FIS V Zero for masonry

Product description
Installation conditions part 2,
Anchor rods and internal threaded anchor without perforated sleeve

Annex A 2

Electronic copy of the ETA by DIBt: ETA-21/0267

Overview system components part 1

Injection cartridge (shuttle cartridge) with sealing cap

Size: 360 ml, 825 ml

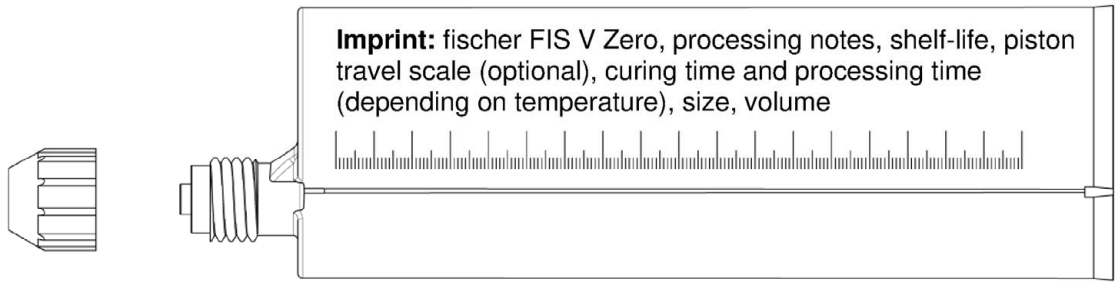

Injection cartridge (coaxial cartridge) with sealing cap

Size: 100 ml, 150 ml, 300 ml, 380 ml, 400 ml, 410 ml

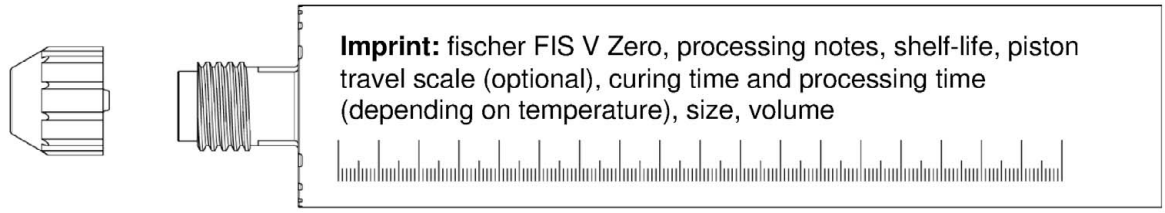

Static mixer MR Plus or FIS JMR (only 825ml) and extension tube

Static mixer MR Plus

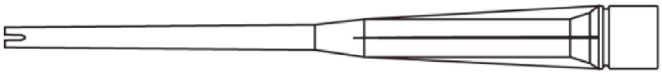

Static mixer JMR Plus

Extension tube

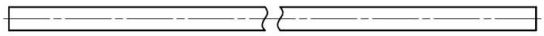

Cleaning brush BS

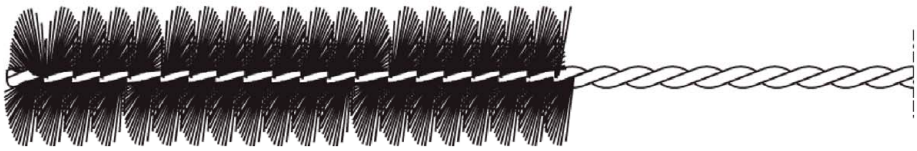

Blow-out pump ABG or ABP

Figures not to scale

fischer injection system FIS V Zero for masonry	**Annex A 3**
Product description Overview system components part 1: cartridge / static mixer / cleaning tools	

Electronic copy of the ETA by DIBt: ETA-21/0267

Overview system components part 2

fischer anchor rod

Size: M8, M10, M12, M16

Internal threaded anchor FIS E

Size: 11x85 M8
15x85 M10 / M12

Perforated sleeve FIS H K

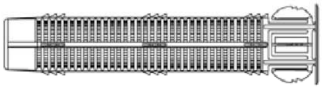

Size: FIS H 12x50 K
FIS H 12x85 K
FIS H 16x85 K
FIS H 20x85 K

Size: FIS H 16x130 K
FIS H 20x130 K

Perforated sleeve FIS H K (push through installation)

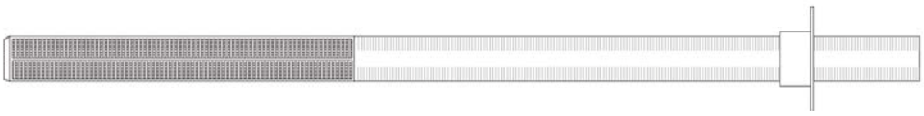

Size:
FIS H 18x130/200 K
FIS H 22x130/200 K

Washer

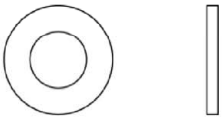

Hexagon nut

Figures not to scale

fischer injection system FIS V Zero for masonry

Product description
Overview system components part 2: Metal parts / perforated sleeves

Annex A 4

Electronic copy of the ETA by DIBt: ETA-21/0267

Table A5.1: Materials

Part	Designation	Material		
1	Injection cartridge	Mortar, hardener; filler		
	Steel grade	Steel	Stainless steel R	High corrosion-resistant steel HCR
		zinc plated	acc. to EN 10088-1:2014 Corrosion resistance class CRC III acc. to EN 1993-1-4:2015	acc. to EN 10088-1:2014 Corrosion resistance class CRC V acc. to EN 1993-1-4:2015
2	Anchor rod	Property class 4.6; 4.8; 5.8 or 8.8; EN ISO 898-1: 2013 zinc plated ≥ 5µm, ISO 4042:2018 Zn5/An(A2K) or hot-dip galvanised EN ISO 10684:2004 f_{uk} ≤ 1000 N/mm² A_5 > 8% fracture elongation	Property class 50, 70 or 80 EN ISO 3506-1:2020 1.4401; 1.4404; 1.4578; 1.4571; 1.4439; 1.4362; 1.4062; 1.4662; 1.4462; EN 10088-1:2014 f_{uk} ≤ 1000 N/mm² A_5 > 8% fracture elongation	Property class 50 or 80 EN ISO 3506-1:2020 or property class 70 with f_{yk}= 560 N/mm² 1.4565; 1.4529 EN 10088-1:2014 f_{uk} ≤ 1000 N/mm² A_5 > 8% fracture elongation
3	Washer ISO 7089:2000	zinc plated ≥ 5µm, ISO 4042:2018 Zn5/An(A2K) or hot-dip galvanised EN ISO 10684:2004	1.4401; 1.4404; 1.4578; 1.4571; 1.4439; 1.4362; EN 10088-1:2014	1.4565;1.4529 EN 10088-1:2014
4	Hexagon nut	Property class 5 or 8; EN ISO 898-2:2012 zinc plated ≥ 5µm, ISO 4042:2018 Zn5/An(A2K) or hot-dip galvanised ISO 10684:2004	Property class 50, 70 or 80 EN ISO 3506-1:2020 1.4401; 1.4404; 1.4578; 1.4571; 1.4439; 1.4362; EN 10088-1:2014	Property class 50, 70 or 80 EN ISO 3506-1:2020 1.4565; 1.4529 EN 10088-1:2014
5	Internal threaded anchor FIS E	Property class 5.8; EN 10277-1:2008-06 zinc plated ≥ 5µm, ISO 4042:2018 Zn5/An(A2K)	Property class 70 EN ISO 3506-1:2020 1.4401; 1.4404; 1.4578; 1.4571; 1.4439; 1.4362; EN 10088-1:2014	Property class 70 EN ISO 3506-1:2020 1.4565; 1.4529 EN 10088-1:2014
6	Commercial standard screw or threaded rod for internal threaded anchor FIS E	Property class 5.8 or 8.8; EN ISO 898-1:2013 zinc plated ≥ 5µm, ISO 4042:2018 Zn5/An(A2K)	Property class 70 EN ISO 3506-1:2020 1.4401; 1.4404; 1.4578; 1.4571; 1.4439; 1.4362; EN 10088-1:2014	Property class 70 EN ISO 3506-1:2020 1.4565; 1.4529 EN 10088-1:2014
7	Perforated sleeve and centring sleeve	PP / PE		

fischer injection system FIS V Zero for masonry

Product description
Materials

Annex A 5

Electronic copy of the ETA by DIBt: ETA-21/0267

Specifications of intended use (part 1)

Table B1.1: Overview installation and use

		fischer injection system FIS V Zero for masonry	
Hole drilling with hammer drill mode		all bricks	
Hole drilling with rotary drill mode		all bricks	
Static and quasi-static load		all bricks	
Use conditions	dry masonry	all bricks	
Installation	Pre-positioned	Anchor rod or internal threaded anchor (in solid brick masonry)	Perforated sleeve with anchor rod or internal threaded anchor (in perforated and solid brick masonry) Size: FIS H 12x50 K, FIS H 12x85 K, FIS H 16x85 K, FIS H 16x130 K, FIS H 20x85 K, FIS H 20x130 K
	Push through	Anchor rod (in solid brick masonry)	Perforated sleeve with anchor rod (in perforated and solid brick masonry) Size: FIS H 18x130/200 K, FIS H 22x130/200 K
Installation and use conditions	condition d/d (dry/dry)	all bricks	
Installation temperature		$T_{i,min}$ = -10 °C to $T_{i,max}$ = +40 °C	
Service temperature	Temperature range Ta	-40 °C to +40 °C	(max. short term temperature +40 °C max. long term temperature +24 °C)
	Temperature range Tb	-40 °C to +80 °C	(max. short term temperature +80 °C max. long term temperature +50 °C)
	Temperature range Tc	-40 °C to +120 °C	(max. short term temperature +120 °C; max. long term temperature +72 °C)

fischer injection system FIS V Zero for masonry	**Annex B 1**
Intended use Specifications (part 1)	

Electronic copy of the ETA by DIBt: ETA-21/0267

Specifications of intended use (part 2)

Anchorages subject to:

- Static and quasi-static loads

Base materials:

- Solid brick masonry (base material group b), acc. to Annex B 12
- Hollow brick masonry (base material group c), according to Annex B 12
- Minimum thickness of masonry member is h_{ef}+30mm
- Mortar strength class of the masonry M2,5 at minimum according to EN 998-2:2010
- For other bricks in solid masonry, hollow or perforated masonry the characteristic resistance of the anchor may be determined by job site tests according to EOTA Technical Report TR 053:2016-04 under consideration of the β-factor according to Annex C 16, Table C16.1

  Note (only applies to solid bricks):
  The characteristic resistance is also valid for larger brick sizes, higher mean compressive strength and higher mean gross dry density of the masonry unit.

Temperature Range:

- **Ta:** from -40°C to +40°C (max. short term temperature +40°C and max. long term temperature +24°C)
- **Tb:** from -40°C to +80°C (max. short term temperature +80°C and max. long term temperature +50°C)
- **Tc:** from -40°C to +120°C (max. short term temperature +120°C and max. long term temperature +72°C)

Use conditions (Environmental conditions):

- Structures subject to dry internal conditions (zinc plated steel, stainless steel or high corrosion resistant steel)
- For all other conditions according to EN 1993-1-4:2015 corresponding to corrosion resistance classes to Annex A 5, Table A5.1.

Electronic copy of the ETA by DIBt: ETA-21/0267

Specifications of intended use (part 2 continued)

Design:

- The anchorages have to be designed in accordance with EOTA Technical Report TR 054:2021-05, Design method A under the responsibility of an engineer experienced in anchorages and masonry work.
  Applies to all bricks, if no other values are specified:
  $N_{Rk} = N_{Rk,b} = N_{Rk,p} = N_{Rk,b,c} = N_{Rk,p,c}$
  $V_{Rk} = V_{Rk,b} = V_{Rk,c,II} = V_{Rk,c,\perp}$
  For the Calculation of pulling out a brick under tension load $\mathbf{N_{Rk,pb}}$ or
  pushing out a brick under shear load $\mathbf{V_{Rk,pb}}$ see EOTA Technical Report TR 054:2021-05.
  $\mathbf{N_{Rk,s}}$, $\mathbf{V_{Rk,s}}$ and $\mathbf{M^0_{Rk,s}}$ see annex C1-C3
  Factors for job site tests and displacements see Annex C16
- Verifiable calculation notes and drawings have to be prepared taking account the relevant masonry in the region of the anchorage, the loads to be transmitted and their transmission to the supports of the structure. The position of the anchor is indicated on the design drawings.

Installation:

- Condition d/d: Installation and use in structures subject to dry, internal conditions
- Hole drilling see **Annex B1.1**
- In case of aborted hole: The hole shall be filled with mortar
- Bridging of unbearing layer (e.g. plaster) at perforated brick masonry see Annex B 6, Table B6.1
- Anchor installation carried out by appropriately qualified personnel and under the supervision of the person responsible for technical matters of the site
- Fastening screws or anchor rods (including nut and washer) must comply with the appropriate material and property class of the fischer internal threaded anchor FIS E.
- Minimum curing time see Annex B 8, Table B8.2
- Commercial standard threaded rods, washers and hexagon nuts may also be used if the following requirements are fulfilled:
  Material dimensions and mechanical properties of the metal parts according to the specifications are given in Annex A 5, Table 5.1
  Conformation of material and mechanical properties of the metal parts by inspection certificate 3.1 according to EN 10204:2004, the documents shall be stored
  Marking of the anchor rod with the effective embedment depth. This may be done by the manufacturer of the rod or by a person on job site

Electronic copy of the ETA by DIBt: ETA-21/0267

Table B4.1: Installation parameters for anchor rods in solid bricks without perforated sleeves

Anchor rod		Thread	M8	M10	M12	M16
Nominal drill hole diameter		d_0 [mm]	10	12	14	18
Effective embedment depth h_{ef} [1] in solid brick (depth of drill hole $h_0 = h_{ef}$)		$h_{ef,min}$ [mm]	50			
		$h_{ef,max}$ [mm]	h-30, ≤200			
Diameter of clearance hole in the fixture	pre-positioned installation	$d_f \leq$ [mm]	9	12	14	18
	push through installation	$d_f \leq$ [mm]	11	14	16	20
Diameter of cleaning brush		$d_b \geq$ [mm]	see Table B8.1			
Maximum installation torque		max T_{inst} [Nm]	see parameters of brick Annex C			

[1] $h_{ef,min} \leq h_{ef} \leq h_{ef,max}$ is possible.

fischer anchor rods M8, M10, M12, M16

Marking (on random place) fischer anchor rod:

Steel zinc plated PC[1] 8.8	• or +	Steel hot-dip galvanised PC[1] 8.8	•
High corrosion resistant steel HCR PC[1] 50	•	High corrosion resistant steel HCR PC[1] 70	–
High corrosion resistant steel HCR PC[1] 80	(	Stainless steel R property class 50	~
Stainless steel R property class 80	*		

Alternatively: Colour coding according to DIN 976-1: 2016;
property class 4.6 marking according to EN ISO 898-1:2013

[1] PC = property class

Installation conditions:

Anchor rod

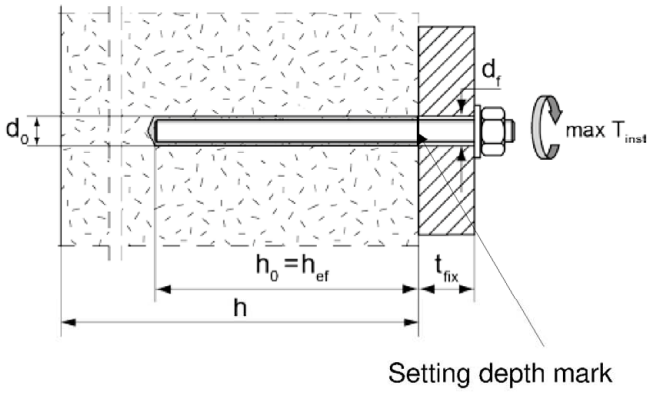

Figures not to scale

fischer injection system FIS V Zero for masonry

Intended use
Installation parameters for anchor rods without perforated sleeve

Annex B 4

Electronic copy of the ETA by DIBt: ETA-21/0267

Table B5.1: Installation parameters for internal threaded anchors FIS E in solid bricks without perforated sleeves

Internal threaded anchor FIS E		**11x85 M8**	**15x85 M10**	**15x85 M12**
Diameter of anchor	d_H [mm]	11	15	
Nominal drill hole diameter	d_0 [mm]	14	18	
Length of anchor	L_H [mm]	85		
Effective embedment depth	$h_0 = h_{ef}$ [mm]	85		
Diameter of cleaning brush	$d_b \geq$ [mm]	see Table B8.1		
Maximum installation torque	max T_{inst} [Nm]	see parameters of brick Annex C		
Diameter of clearance hole in the fixture	d_f [mm]	9	12	14
Screw-in depth	$l_{E,min}$ [mm]	8	10	12
	$l_{E,max}$ [mm]	60		

fischer Internal threaded anchor FIS E

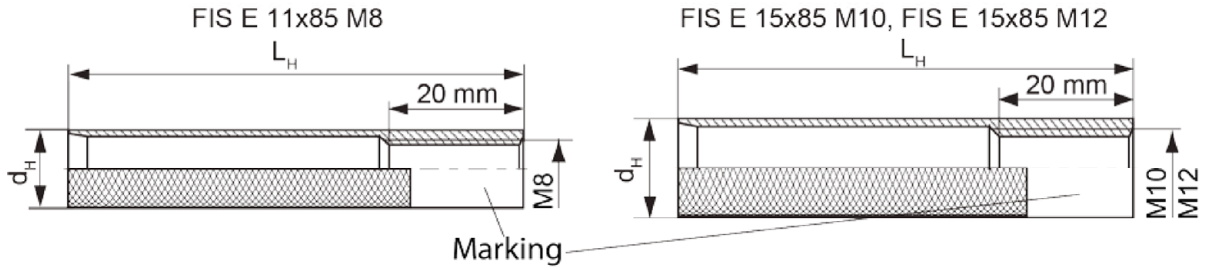

Marking:

Size, e.g. **M8**, Stainless steel: R, e.g. **M8 R**, High corrosion-resistant steel: HCR, e.g. **M8 HCR**

Installation conditions:

Internal threaded anchor

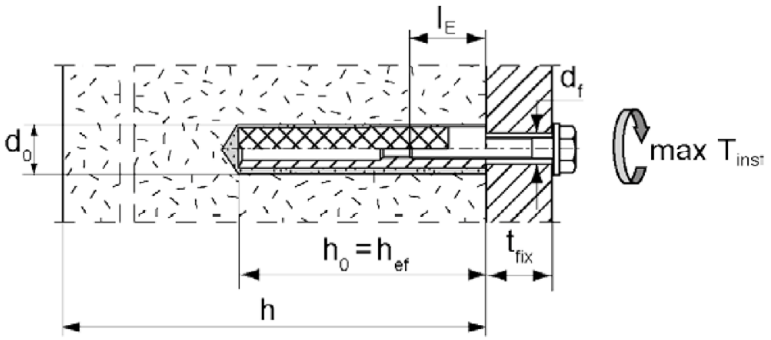

Figures not to scale

fischer injection system FIS V Zero for masonry

Intended use
Installation parameters for internal threaded rods FIS E without perforated sleeve

Annex B 5

Electronic copy of the ETA by DIBt: ETA-21/0267

Table B6.1: Installation parameters for anchor rods and internal threaded anchors FIS E with perforated sleeves (pre-positioned installation)

perforated sleeve FIS H K		**12x50**	**12x85**[2)]	**16x85**	**16x130**[2)]	**20x85**	**20x130**[2)]
Nominal drill hole diameter $d_0 = D_{sleeve,nom}$	d_0 [mm]	12		16		20	
Depth of drill hole	h_0 [mm]	55	90	90	135	90	135
Effective embedment depth	$h_{ef,min}$ [mm]	50	65	85	110	85	110
	$h_{ef,max}$ [mm]	50	85	85	130	85	130
Size of threaded rod	[-]	M8		M8 and M10		M12 and M16	
Size of internal threaded anchor FIS E		-	-	11x85	-	15x85	-
Diameter of cleaning brush [1)]	$d_b \geq$ [mm]	see Table B8.1					
Maximum installation torque	max T_{inst} [Nm]	see parameters of brick Annex C					

[1)] Only for solid areas in hollow bricks and solid bricks.

[2)] Bridging of unbearing layer (e.g. plaster) is possible. When reducing the effective embedment depth $h_{ef,min}$, the values of the next shorter perforated sleeve of the same diameter must be used. The smaller value of charastereristic resistance must be taken.

Perforated sleeve

FIS H 12x50 K; FIS H 12x85 K; FIS H 16x85 K; FIS H 16x130 K;
FIS H 20x85 K; FIS H 20x130 K

Marking:
Size $D_{sleeve,\ nom}$ x L_{sleeve}
(e.g.: 16x85)

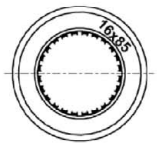

$D_{sleeve,\ nom}$

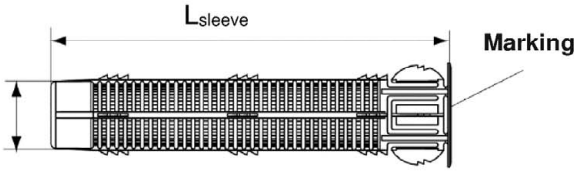

fischer Internal threaded anchor FIS E

FIS E 11x85 M8

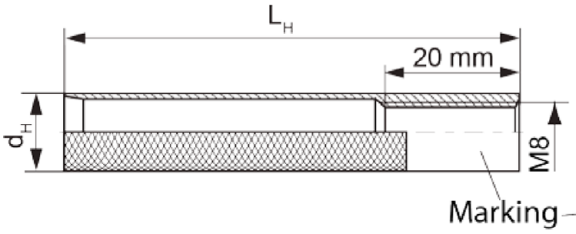

FIS E 15x85 M10, FIS E 15x85 M12

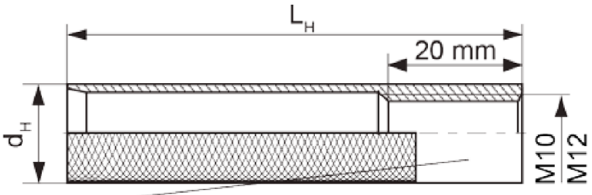

Installation conditions:

Anchor rod with perforated sleeve

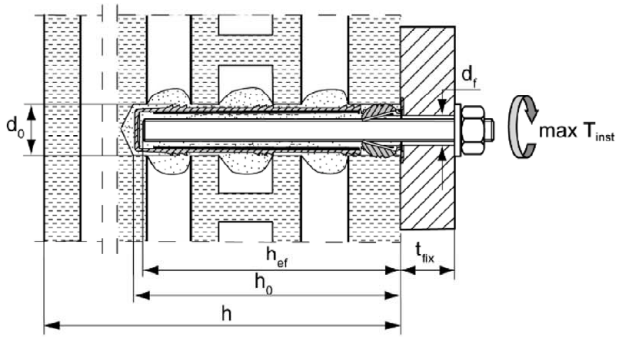

Internal threaded anchor with perforated sleeve

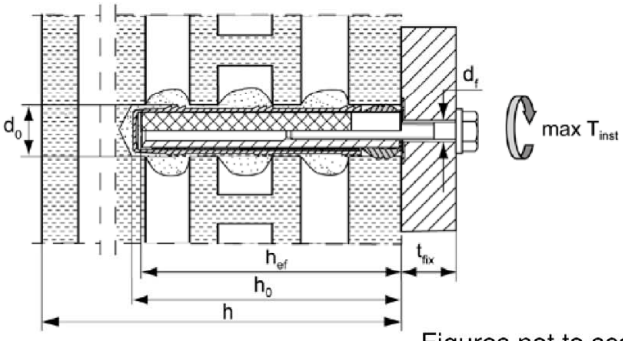

Figures not to scale

fischer injection system FIS V Zero for masonry

Intended use
Installation parameters for anchor rods and internal threaded anchors FIS E with perforated sleeve (pre-positioned installation)

Annex B 6

Electronic copy of the ETA by DIBt: ETA-21/0267

Table B7.1: Installation parameters for anchor rods with perforated sleeves (push through installation)

Perforated sleeve FIS H K		**18x130/200**		**22x130/200**
Nominal sleeve diameter	$D_{sleeve,nom}$ [mm]	16		20
Nominal drill hole diameter	d_0 [mm]	18		22
Depth of drill hole	h_0 [mm]	135		
Effective embedment depth	h_{ef} [mm]	≥130		
Diameter of cleaning brush [1)]	d_b ≥ [mm]	see Table B8.1		
Size of threaded rod	[-]	M10	M12	M16
Maximum installation torque	max T_{inst} [Nm]	see parameters of brick Annex C		
Thickness of fixture	$t_{fix,max}$ [mm]	200		

[1)] Only for solid areas in hollow bricks and solid bricks.

Perforated sleeve
FIS H 18x130/200 K; FIS H 22x130/200 K

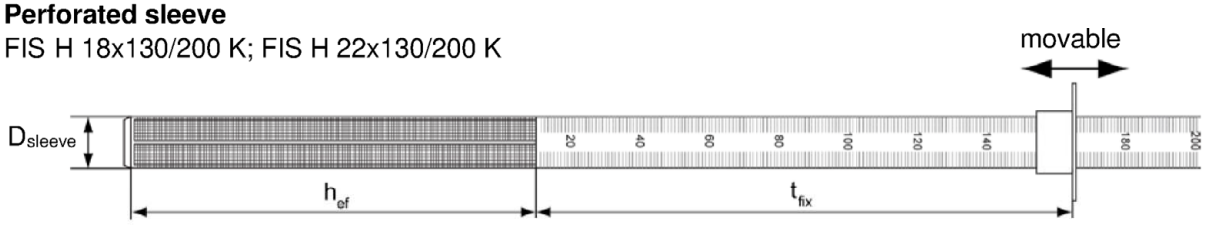

Installation conditions:

Anchor rod with perforated sleeve

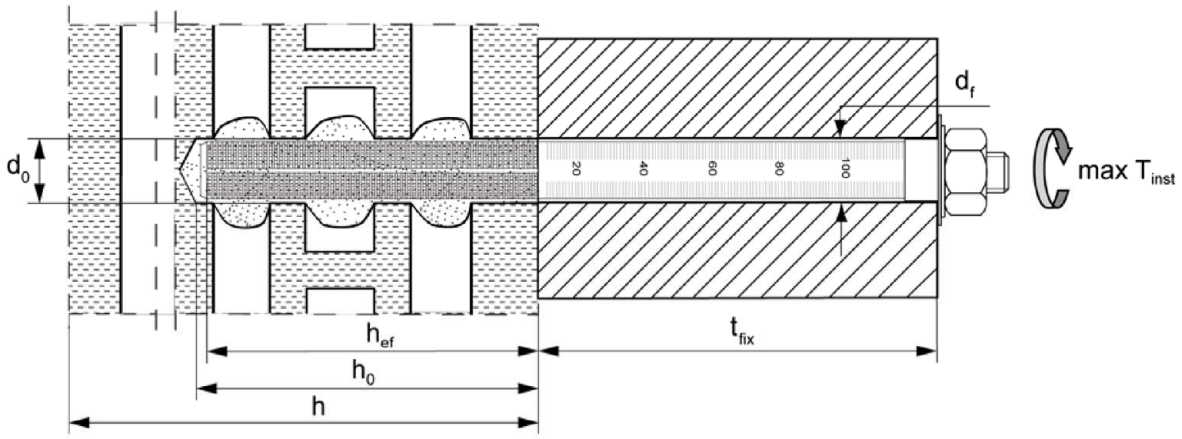

Figures not to scale

fischer injection system FIS V Zero for masonry

Intended use
Installation parameters for anchor rods with perforated sleeves (push through installation)

Annex B 7

Electronic copy of the ETA by DIBt: ETA-21/0267

Table B8.1: Parameters of the cleaning brush BS (steel brush with steel bristles)

The size of the cleaning brush refers to the drill hole diameter

Nominal drill hole diameter	d_0 [mm]	10	12	14	16	18	20	22
Steel brush diameter	d_b [mm]	11	14	16	20	20	25	25

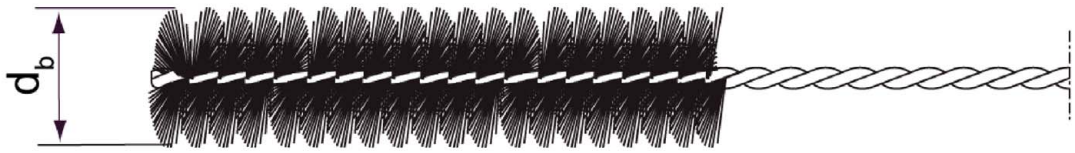

Only for solid areas in hollow bricks and solid bricks

Table B8.2: Maximum processing times and minimum curing times
(During the curing time of the mortar the temperature of the anchoring base may not fall below the listed minimum temperature)

Temperature at anchoring base [°C]	Maximum processing time t_{work}	Minimum curing time t_{cure}
	FIS V Zero	FIS V Zero
-10 to -5 [1)]	6 h	72 h
> -5 to 0 [1)]	2 h	24 h
> 0 to 5 [1)]	45 min	12 h
> 5 to 10	20 min	6 h
> 10 to 15	8 min	3 h
> 15 to 20	5 min	2 h
> 20 to 25	3 min	1 h
> 25 to 30	2 min	45 min
> 30 to 40	1 min	30 min

[1)] Minimum cartridge temperature +5°C

Figures not to scale

fischer injection system FIS V Zero for masonry

Intended use
Parameters of the cleaning brush (steel brush)
Processing time and curing time

Annex B 8

Electronic copy of the ETA by DIBt: ETA-21/0267

Installation instruction part 1

Installation in solid brick without perforated sleeve

1	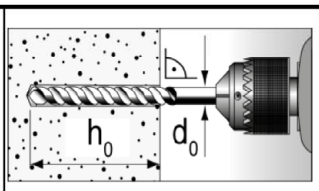	Drill the hole (drilling method see Annex C of the respective brick) depth of drill hole $\mathbf{h_0}$ and nominal drill hole diameter $\mathbf{d_0}$ see **Table B4.1; B5.1**		
2	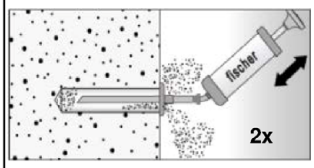	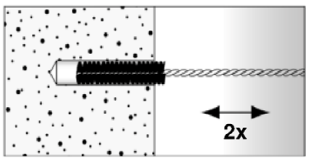	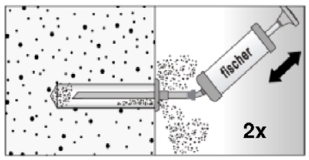	Blow out the drill hole twice. Brush twice and blow out twice again.
3	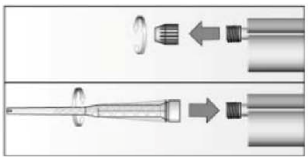	Remove the sealing cap. Screw on the static mixer. (the spiral in the static mixer must be clearly visible)		
4		Place the cartridge into a suitable dispenser	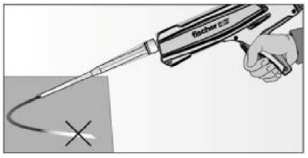	Extrude approximately 10 cm of material out until the resin is evenly grey in colour. Do not use mortar that is not uniformly grey.
5	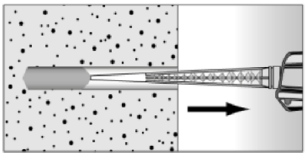	Fill approximetly 2/3 of the drill hole with mortar beginning from the bottom of the hole[1]. Avoid bubbles.	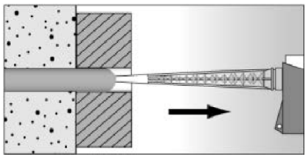	For push through installation fill the annular gap with mortar.
6	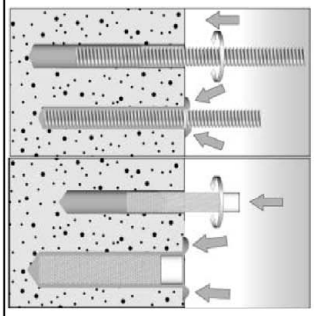	Only use clean and oil-free metal parts. Mark the setting depth. Insert the anchor rod or internal threaded anchor FIS E by hand. Recommendation: Rotation back and forth of the anchor rod or internal threaded anchor FIS E makes pushing easy. When reaching the setting depth mark, excess mortar must emerge from the mouth of the drill hole.		
7		Do not touch. Minimum curing time see Table **B8.2**	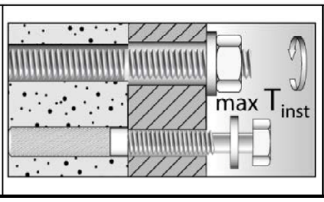	Mounting the fixture. max T_{inst} see parameter of brick.

[1] Exact volume of mortar see manufacturer´s specifications

fischer injection system FIS V Zero for masonry	**Annex B 9**
Intended use Installation instruction part 1 Installation in solid brick without perforated sleeve	

Electronic copy of the ETA by DIBt: ETA-21/0267

Installation instruction part 2

Installation in perforated or solid brick with perforated sleeve (pre-positioned installation)

1	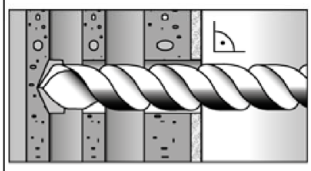	Drill the hole (drilling method see Annex C of the respective brick). depth of drill hole $\mathbf{h_0}$ and nominal drill hole diameter $\mathbf{d_0}$ see **Table B6.1**	When install perforated sleeves in solid bricks or solid areas of hollow bricks, also clean the hole by blowing out and brushing.	
2	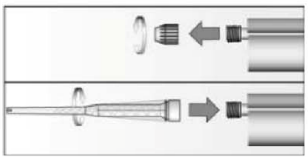	Remove the sealing cap. Screw on the static mixer. (the spiral in the static mixer must be clearly visible)		
3		Place the cartridge into a suitable dispenser.	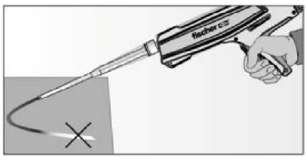	Extrude approximately 10 cm of material out until the resin is evenly grey in colour. Do not use mortar that is not uniformly grey.
4	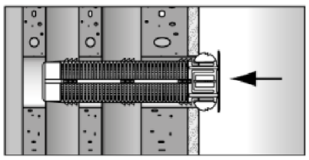	Insert the perforated sleeve flush with the surface of the masonry or plaster.	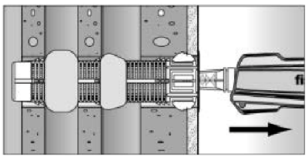	Fill the perforated sleeve completely with mortar beginning from the bottom of the hole. [1]
5	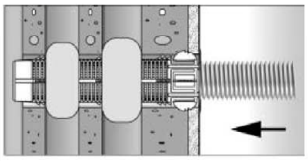	Only use clean and oil-free metal parts. Mark the setting depth. Insert the anchor rod or the internal threaded anchor FIS E by hand. Recommendation: Rotation back and forth of the anchor rod or internal threaded anchor FIS E makes pushing easy until reaching the setting depth mark (anchor rod) or flush with the surface (internal threaded anchor).		
6		Do not touch. Minimum curing time see Table **B8.2**	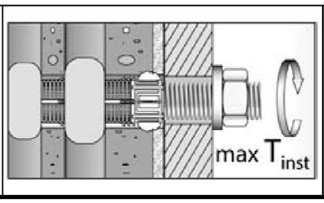	Mounting the fixture. max T_{inst} see parameter of brick.

[1] Exact volume of mortar see manufacturer´s specification.

fischer injection system FIS V Zero for masonry	**Annex B 10**
Intended use Installation instruction part 2 Installation in perforated or solid brick with perforated sleeve (pre-positioned installation)	

Electronic copy of the ETA by DIBt: ETA-21/0267

Installation instruction part 3

Installation in perforated or solid brick with perforated sleeve (push through installation)

1	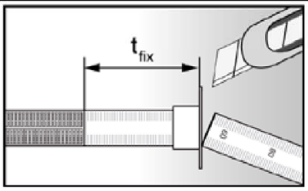	Push the movable stop up to the correct thickness of fixture and cut the overlap.	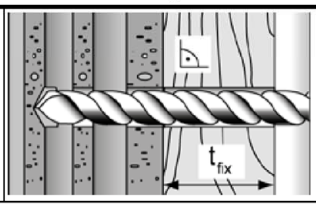	Drill the hole through the fixture. Depth of drill hole **(h_0 + t_{fix})** and nominal drill hole diameter **d_0** see **Table B7.1**
2	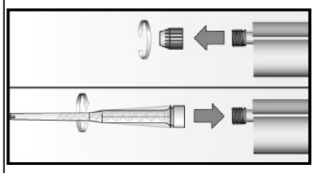	Remove the sealing cap. Screw on the static mixer. (the spiral in the static mixer must be clearly visible)		
3	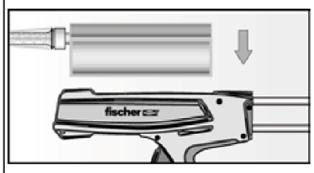	Place the cartridge into a suitable dispenser.	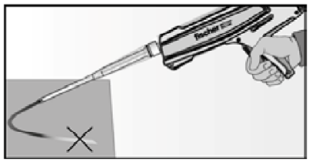	Extrude approximately 10 cm of material out until the resin is evenly grey in colour. Do not use mortar that is not uniformly grey.
4	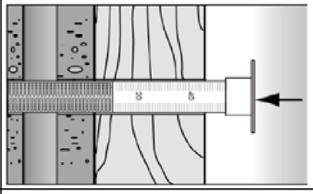	Insert the perforated sleeve flush with the surface of the fixture into the drill hole.	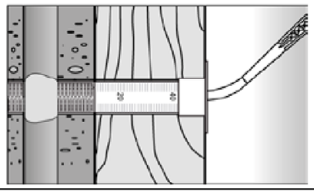	Fill the sleeve with mortar beginning from the bottom of the hole. [1] For deep drill holes use an extension tube.
5	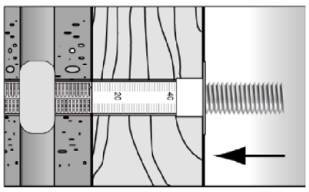	Only use clean and oil-free metal parts. Mark the setting depth. Insert the anchor rod by hand. Recommendation: Rotation back and forth of the anchor rod makes pushing easy until reaching the setting depth mark (anchor rod).		
6		Do not touch. Minimum curing time see Table **B8.2**	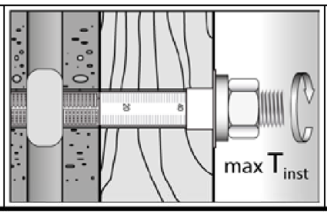	Mounting the fixture. max T_{inst} see parameter of brick.

[1] Exact volume of mortar see manufacturer´s specification.

fischer injection system FIS V Zero for masonry	**Annex B 11**
Intended use Installation instruction part 3 Installation in perforated or solid brick with perforated sleeve (push through installation)	

Electronic copy of the ETA by DIBt: ETA-21/0267

Table B12.1: Overview of assessed bricks

Kind of masonry	Brick format [mm]	Mean compressive strength [N/mm²]	Main country of origin	Mean gross dry density ρ [kg/dm³]	Annex
Solid brick Mz					
Solid brick Mz	≥ 230x108x55	36 - 48	Denmark	≥2,0	C4/C5
Solid calcium silicate (sand - lime) brick KS / perforated calcium silicate (sand - lime) brick KSL					
Solid calcium silicate brick KS	**NF** ≥240x115x71	8- 20	Germany	≥2,0	C6/C7
Perforated calcium silicate brick KSL	**3DF** 240x175x113	8 - 16	Germany	≥1,6	C8 – C11
Vertical perforated brick HLz					
Vertical perforated brick HLz	230x108x55	6 - 16	Denmark	≥1,6	C12/C13
Lightweight aggregate concrete hollow block Hbl					
Lightweight aggregate concrete hollow block Hbl	500x200x200	2 - 4	France	≥1,0	C14/C15

Picture B12.1: Overview dimensions of perforated and hollow bricks

Perforated calcium silicate (sand-lime) brick KSL, 3DF, EN 771-2:2015; e.g. KS Wemding according to Annex C 8

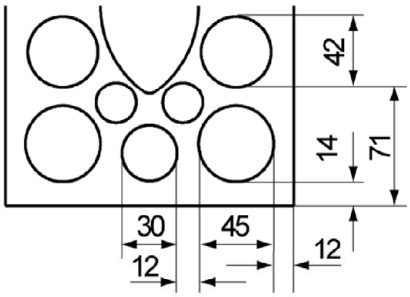

Vertical perforated brick HLz, EN 771-1:2015; e.g. Wienerberger according to Annex C 12

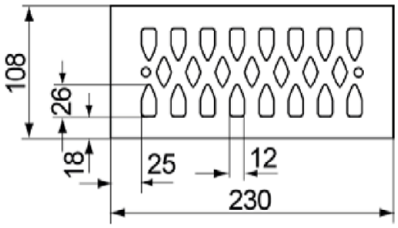

Lightweight aggregate concrete hollow block Hbl, EN 771-3:2015; e.g. Sepa according to Annex C 14

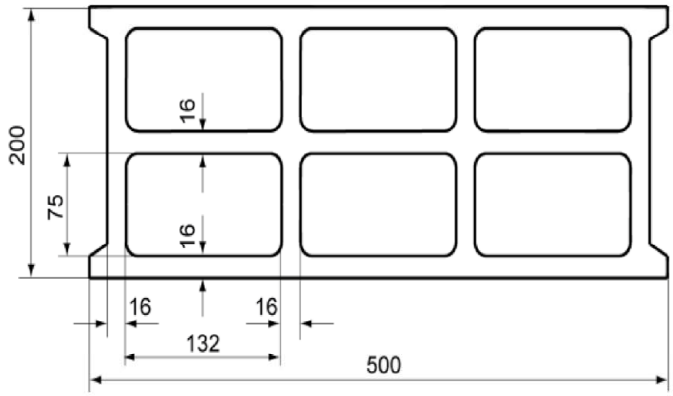

Measures in [mm]

Figures not to scale

fischer injection system FIS V Zero for masonry

Intended use
Overview of assessed bricks
Overview dimensions of perforated and hollow bricks

Annex B 12

Electronic copy of the ETA by DIBt: ETA-21/0267

Spacing and edge distance

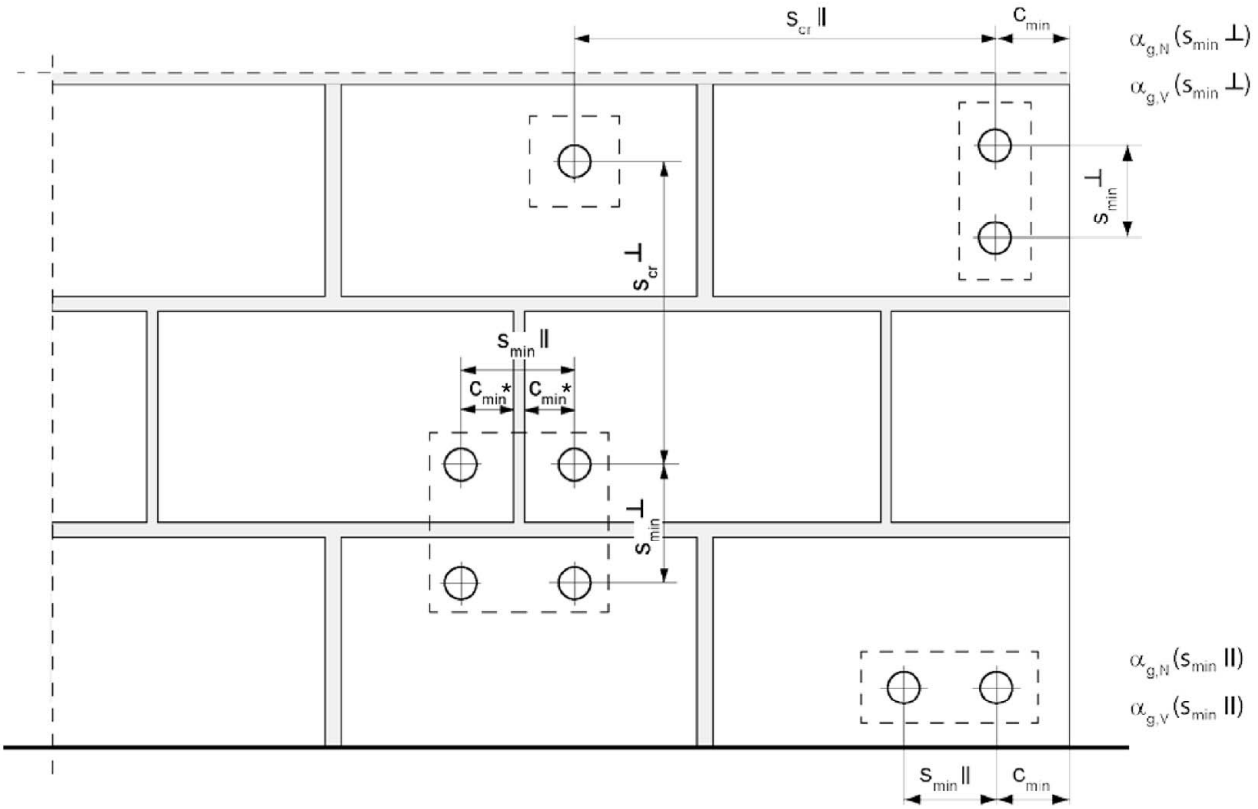

* Only, if vertical joints are not completely filled with mortar

s_{min} ∥	=	Minimum spacing parallel to horizontal joint
s_{min} ⊥	=	Minimum spacing perpendicular to horizontal joint
s_{cr} ∥	=	Characteristic spacing parallel to horizontal joint
s_{cr} ⊥	=	Characteristic spacing perpendicular to horizontal joint
$c_{cr} = c_{min}$	=	Edge distance
$\alpha_{g,N}$ (s_{min} ∥)	=	Group factor for tension load, anchor group parallel to horizontal joint
$\alpha_{g,V}$ (s_{min} ∥)	=	Group factor for shear load, anchor group parallel to horizontal joint
$\alpha_{g,N}$ (s_{min} ⊥)	=	Group factor for tension load, anchor group vertical to horizontal joint
$\alpha_{g,V}$ (s_{min} ⊥)	=	Group factor for shear load, anchor group vertical to horizontal joint

Electronic copy of the ETA by DIBt: ETA-21/0267

Spacing and edge distance (continuation)

For $s \geq s_{cr}$ $\alpha_g = 2$

For $s_{min} \leq s < s_{cr}$ α_g according to installation parameters of brick Annex C

Group of 2 anchors

$N^g_{Rk} = \alpha_{g,N} \bullet N_{Rk}$; $V^g_{Rk,b} = V^g_{Rk,c,II} = V^g_{Rk,c,\perp} = \alpha_{g,V} \bullet V_{Rk}$

Group of 4 anchors

$N^g_{Rk} = \alpha_{g,N}\ (s_{min}II) \bullet \alpha_{g,N}\ (s_{min}\perp) \bullet N_{Rk}$;

$V^g_{Rk,b} = V^g_{Rk,c,II} = V^g_{Rk,c,\perp} = \alpha_{g,V}\ (s_{min}II) \bullet \alpha_{g,V}\ (s_{min}\perp) \bullet V_{Rk}$

with N_{Rk} and $\alpha_{g,N}$ depending on $s_{min}II$ or $s_{min}\perp$ acc. to Annex C

with V_{Rk} and $\alpha_{g,V}$ depending on $s_{min}II$ or $s_{min}\perp$ acc. to Annex C

Electronic copy of the ETA by DIBt: ETA-21/0267

Table C1.1: Characteristic resistance to **steel failure** of a single anchor under **tension loading** of **fischer anchor rods** and **standard threaded rods**

Anchor rod / standard threaded rod				**M8[3]**	**M10[3]**	**M12**	**M16**
Characteristic resistance to steel failure under tension loading							
Characteristic resistance $N_{Rk,s}$	Steel zinc plated	Property class	4.6	[kN]	15(13)	23(21)	33	63
			4.8		15(13)	23(21)	33	63
			5.8		19(17)	29(27)	43	79
			8.8		29(27)	47(43)	68	126
	Stainless steel R and High corrosion resistant steel HCR		50		19	29	43	79
			70		26	41	59	110
			80		30	47	68	126
Partial factors [1]							
Partial factors $\gamma_{Ms,N}$	Steel zinc plated	Property class	4.6	[-]	2,00			
			4.8		1,50			
			5.8		1,50			
			8.8		1,50			
	Stainless steel R and High corrosion resistant steel HCR		50		2,86			
			70		1,50[2] / 1,87			
			80		1,60			

[1] In absence of other national regulations

[2] Only for fischer FIS A made of high corrosion-resistant steel HCR

[3] Values in brackets are valid for undersized threaded rods with smaller stress area A_s for hot dip galvanised standard threaded rods according to EN ISO 10684:2004+AC:2009

Electronic copy of the ETA by DIBt: ETA-21/0267

Table C2.1: Characteristic resistance to **steel failure** of a single anchor under **shear loading** with and without lever arm of **fischer anchor rods** and **standard threaded rods**

Anchor rod / standard threaded rod				**M8**[3]	**M10**[3]	**M12**	**M16**
Characteristic resistance to steel failure under shear loading							
without lever arm							
Characteristic resistance $V_{Rk,s}$	Steel zinc plated	Property class	4.6	[kN]	9(8)	14(13)	20	38
			4.8		9(8)	14(13)	20	38
			5.8		11(10)	17(16)	25	47
			8.8		15(13)	23(21)	34	63
	Stainless steel R and High corrosion resistant steel HCR		50		9	15	21	39
			70		13	20	30	55
			80		15	23	34	63
with lever arm								
Characteristic resistance $M^0_{Rk,s}$	Steel zinc plated	Property class	4.6	[Nm]	15(13)	30(27)	52	133
			4.8		15(13)	30(27)	52	133
			5.8		19(16)	37(33)	65	166
			8.8		30(26)	60(53)	105	266
	Stainless steel R and High corrosion resistant steel HCR		50		19	37	65	166
			70		26	52	92	232
			80		30	60	105	266
Partial factors [1]							
Partial factors $\gamma_{Ms,V}$	Steel zinc plated	Property class	4.6	[-]	1,67			
			4.8		1,25			
			5.8		1,25			
			8.8		1,25			
	Stainless steel R and High corrosion resistant steel HCR		50		2,38			
			70		1,25[2] / 1,56			
			80		1,33			

[1] In absence of other national regulations

[2] Only for fischer FIS A made of high corrosion-resistant steel HCR

[3] Values in brackets are valid for undersized threaded rods with smaller stress area A_s for hot dip galvanised standard threaded rods (M8 resp. M10) according to EN ISO 10684:2004+AC:2009.

Electronic copy of the ETA by DIBt: ETA-21/0267

fischer injection system FIS V Zero for masonry

Performances
Characteristic resistance to steel failure of a single anchor under shear loading with and without lever arm of fischer anchor rods and standard threaded rods

Annex C 2

Table C3.1: Characteristic resistance to **steel failure** of a single anchor under **tension** / **shear loading** of **internal threaded anchors FIS E**

fischer internal threaded anchor FIS E					**M8**	**M10**	**M12**
Characteristic resistance to steel failure under tension loading							
Characteristic resistance with screw	$N_{Rk,s}$	Property class	5.8	[kN]	18	29	42
		Property class 70	R		26	41	59
			HCR		26	41	59
Partial factors [1]							
Partial factors	$\gamma_{Ms,N}$	Property class	5.8	[-]	1,50		
		Property class 70	R		1,87		
			HCR		1,87		
Characteristic resistance to steel failure under shear loading							
without lever arm							
Characteristic resistance with screw	$V_{Rk,s}$	Property class	5.8	[kN]	9	15	21
		Property class 70	R		13	20	30
			HCR		13	20	30
with lever arm							
Characteristic resistance	$M^0_{Rk,s}$	Property class	5.8	[Nm]	19	37	65
		Property class 70	R		26	52	92
			HCR		26	52	92
Partial factors [1]							
Partial factors	$\gamma_{Ms,V}$	Property class	5.8	[-]	1,25		
		Property class 70	R		1,56		
			HCR		1,56		

[1] In absence of other national regulations

Electronic copy of the ETA by DIBt: ETA-21/0267

Solid brick Mz, EN 771-1:2015

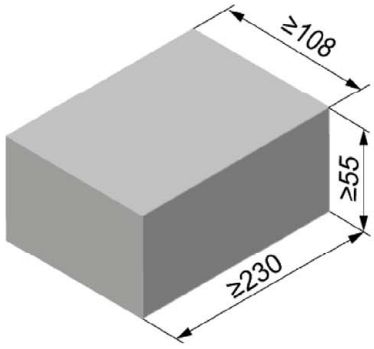

Solid brick Mz, EN 771-1:2015			
Producer	e.g. Wienerberger		
Nominal dimensions [mm]	length L	width W	height H
	≥ 230	≥ 108	≥ 55
Mean gross dry density ρ [kg/dm³]	≥ 2,0		
Mean compressive strength [N/mm²]	36 / 48		
Standard	EN 771-1:2015		

Table C4.1: Installation parameters

Anchor rod			**M8**		**M10**		**M12**		**M16**		**-**	**-**	
Internal threaded anchor FIS E			**-**		**-**		**-**		**-**		**M8**	**M10**	**M12**
											11x85	**15x85**	
Anchor rod and internal threaded anchor FIS E without perforated sleeve													
Effective embedment depth	h_{ef}	[mm]	50	80	50	80	50	80	50	80	85		
Max. installation torque	max T_{inst}	[Nm]	10								10		
General installation parameters													
Edge distance	c_{min}	[mm]	100										
Spacing	s_{min} ∥	[mm]	100										
	s_{cr} ∥	[mm]	3 x h_{ef}										
	s_{min} ⊥	[mm]	100										
	s_{cr} ⊥	[mm]	3 x h_{ef}										
Drilling method													
Hole drilling with rotary drill mode or hammer drilling with hard metal hammer drill													

Table C4.2: Group factors

Anchor rods		**M8**	**M10**	**M12**	**M16**	**-**	**-**	
Internal threaded anchor FIS E		**-**	**-**	**-**	**-**	**M8**	**M10**	**M12**
						11x85	**15x85**	
Group factors	$\alpha_{g,N}$ (s_{min} ∥) [-]	1,81						
	$\alpha_{g,V}$ (s_{min} ∥) [-]	1,49						
	$\alpha_{g,N}$ (s_{min} ⊥) [-]	1,74						
	$\alpha_{g,V}$ (s_{min} ⊥) [-]	1,49						

fischer injection system FIS V Zero for masonry

Performances
Solid brick Mz, dimensions, installation parameters

Annex C 4

Electronic copy of the ETA by DIBt: ETA-21/0267

Solid brick Mz, EN 771-1:2015

Table C5.1: Characteristic resistance to pull-out failure or brick breakout failure of a single anchor under tension loading

Anchor rod	**M8**		**M10**		**M12**		**M16**		**-**	**-**	
Internal threaded anchor FIS E	**-**		**-**		**-**		**-**		**M8**	**M10**	**M12**
									11x85	**15x85**	
Tension resistance $N_{Rk} = N_{Rk,p} = N_{Rk,b} = N_{Rk,p,c} = N_{Rk,b,c}$ [kN] depending on the mean compressive strength f_b; Installation and use condition d/d; (temperature range 24/40°C)											
Mean compressive strength f_b	Effective embedment depth h_{ef} [mm]										
	50	80	50	80	50	80	50	80	85		
36 N/mm²	2,5	3,0	3,0	3,0	3,0	3,0	3,0	4,5	2,5		
48 N/mm²	3,0	3,5	3,5	3,5	3,5	3,5	3,5	5,0	3,0		
Tension resistance $N_{Rk} = N_{Rk,p} = N_{Rk,b} = N_{Rk,p,c} = N_{Rk,b,c}$ [kN] depending on the mean compressive strength f_b; Installation and use condition d/d; (temperature range 50/80°C and 72/120°C)											
Mean compressive strength f_b	Effective embedment depth h_{ef} [mm]										
	50	80	50	80	50	80	50	80	85		
36 N/mm²	1,5	2,0	2,0	2,0	2,0	2,0	2,0	3,5	1,5		
48 N/mm²	1,5	2,5	2,5	2,5	2,5	2,5	2,5	4,0	1,5		

Table C5.2: Characteristic resistance to local brick failure or brick edge failure of a single anchor under shear loading

Anchor rod	**M8**		**M10**		**M12**		**M16**		**-**	**-**	
Internal threaded anchor FIS E	**-**		**-**		**-**		**-**		**M8**	**M10**	**M12**
									11x85	**15x85**	
Shear resistance $V_{Rk} = V_{Rk,b} = V_{Rk,c,II} = V_{Rk,c,\perp}$ [kN] depending on the mean compressive strength f_b; Installation and use condition d/d; (temperature range 24/40°C, 50/80°C and 72/120°C)											
Mean compressive strength f_b	Effective embedment depth h_{ef} [mm]										
	50	80	50	80	50	80	50	80	85		
36 N/mm²	2,5	4,5	2,5	4,5	2,5	4,5	2,5	4,5	2,5	2,5	
48 N/mm²	3,0	5,0	3,0	5,0	3,0	5,0	3,0	5,0	3,0	3,0	

Factor for job site tests see annex C16 and displacements see annex C17

Electronic copy of the ETA by DIBt: ETA-21/0267

Solid calcium silicate (sand-lime) brick KS, NF, EN 771-2:2015

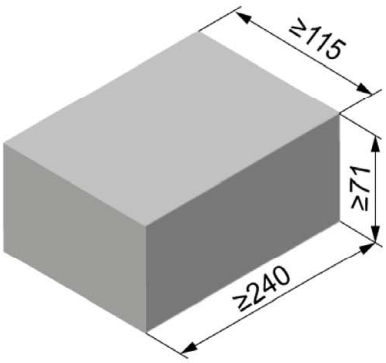

Solid calcium silicate (sand-lime) brick KS, NF, EN 771-2:2015			
Producer	---		
Nominal dimensions [mm]	length L	width W	height H
	≥ 240	≥ 115	≥ 71
Mean gross dry density [kg/dm³]	≥ 2,0		
Mean compressive strength [N/mm²]	12 / 16 / 20		
Standard	EN 771-2:2015		

Table C6.1: Installation parameters

Anchor rod			**M8**		**M10**		**M12**		**M16**		**-**	**-**	
Internal threaded anchor FIS E			**-**		**-**		**-**		**-**		**M8**	**M10**	**M12**
											11x85	**15x85**	
Anchor rod and internal threaded anchor FIS E without perforated sleeve													
Effective embedment depth	h_{ef}	[mm]	50	80	50	80	50	80	50	80	85	85	
Max. installation torque	max T_{inst}	[Nm]	8		10						8	10	
General installation parameters													
Edge distance	c_{min}	[mm]	100										
Spacing	s_{min} ∥	[mm]	100										
	s_{cr} ∥	[mm]	3 x h_{ef}										
	s_{min} ⊥	[mm]	100										
	s_{cr} ⊥	[mm]	3 x h_{ef}										
Drilling method													
Hole drilling with rotary drill mode or hammer drilling with hard metal hammer drill													

Table C6.2: Group factors

Anchor rod		**M8**	**M10**	**M12**	**M16**	**-**	**-**	
Internal threaded anchor FIS E		**-**	**-**	**-**	**-**	**M8**	**M10**	**M12**
						11x85	**15x85**	
Group factors	$\alpha_{g,N}$ (s_{min} ∥) [-]	1,67						
	$\alpha_{g,V}$ (s_{min} ∥) [-]	1,26						
	$\alpha_{g,N}$ (s_{min} ⊥) [-]	1,67						
	$\alpha_{g,V}$ (s_{min} ⊥) [-]	2,0						

fischer injection system FIS V Zero for masonry

Performances
Solid calcium silicate (sand-lime) brick KS, NF, dimensions, installation parameters

Annex C 6

Electronic copy of the ETA by DIBt: ETA-21/0267

Solid calcium silicate (sand-lime) brick KS, NF, EN 771-2:2015

Table C7.1: Characteristic resistance to pull-out failure or brick breakout failure of a single anchor under tension loading

Anchor rod	**M8**		**M10**		**M12**		**M16**		**-**		**-**	
Internal threaded anchor FIS E	**-**		**-**		**-**		**-**		**M8**		**M10**	**M12**
									11x85		**15x85**	
Tension resistance $N_{Rk} = N_{Rk,p} = N_{Rk,b} = N_{Rk,p,c} = N_{Rk,b,c}$ [kN] depending on the mean compressive strength f_b; Installation and use condition d/d (temperature range 24/40°C)												
Mean compressive strength f_b	Effective embedment depth h_{ef} [mm]											
	50	80	50	80	50	80	50	80	85		85	
12 N/mm²	2,0	2,0	2,5	4,5	2,0	4,5	2,0	2,0	2,0			
16 N/mm²	2,5	2,5	2,5	5,0	2,5	5,0	2,5	2,5	2,5			
20 N/mm²	2,5	3,0	3,0	6,0	2,5	6,0	2,5	3,0	2,5			
Tension resistance $N_{Rk} = N_{Rk,p} = N_{Rk,b} = N_{Rk,p,c} = N_{Rk,b,c}$ [kN] depending on the mean compressive strength f_b; Installation and use condition d/d (temperature range 50/80°C and 72/120°C)												
Mean compressive strength f_b	Effective embedment depth h_{ef} [mm]											
	50	80	50	80	50	80	50	80	85		85	
12 N/mm²	1,5	1,5	1,5	3,0	1,5	3,0	1,5	1,5	1,5			
16 N/mm²	1,5	1,5	2,0	3,5	1,5	3,5	1,5	1,5	1,5			
20 N/mm²	2,0	2,0	2,0	4,0	2,0	4,0	2,0	2,0	2,0			

Table C7.2: Characteristic resistance to local brick failure or brick edge failure of a single anchor under shear loading

Anchor rod	**M8**		**M10**		**M12**		**M16**		**-**		**-**	
Internal threaded anchor FIS E	**-**		**-**		**-**		**-**		**M8**		**M10**	**M12**
									11x85		**15x85**	
Shear resistance $V_{Rk} = V_{Rk,b} = V_{Rk,c,II} = V_{Rk,c,\perp}$ [kN] depending on the mean compressive strength f_b; Installation and use condition d/d (temperature range 24/40°C, 50/80°C and 72/120°C)												
Mean compressive strength f_b	Effective embedment depth h_{ef} [mm]											
	50	80	50	80	50	80	50	80	85		85	
12 N/mm²	3,5	3,5	4,5	4,5	3,5	4,0	3,5	4,0	3,5		3,5	
16 N/mm²	4,0	4,0	5,0	5,0	4,0	4,5	4,0	4,5	4,0		4,0	
20 N/mm²	4,5	4,5	6,0	6,0	4,5	5,0	4,5	5,0	4,5		4,5	

Factor for job site tests see annex C16 and displacements see annex C17

Electronic copy of the ETA by DIBt: ETA-21/0267

Perforated calcium silicate (sand-lime) brick KSL, 3DF, EN 771-2:2015

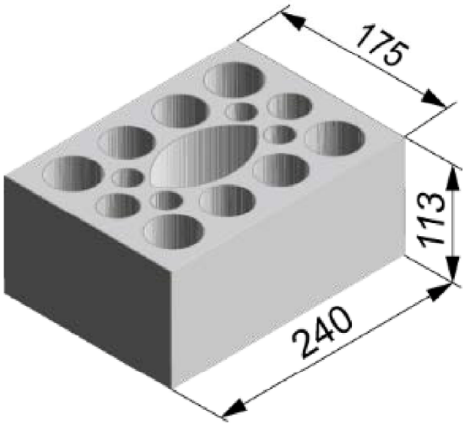

Perforated calcium silicate (sand-lime) brick KSL, 3DF, EN 771-2:2015			
Producer	e.g. KS Wemding		
Nominal dimensions [mm]	length L	width W	height H
	240	175	113
Mean gross dry density ρ [kg/dm³]	≥ 1,6		
Mean compressive strength [N/mm²]	6 / 8 / 10 / 12 / 16		
Standard	EN 771-2:2015		

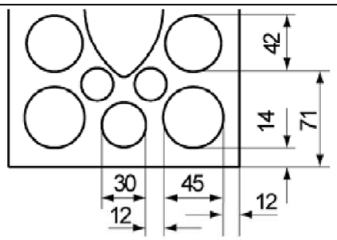

Dimensions see also Annex B 12

Table C8.1: Installation parameters
(Pre-positioned installation with perforated sleeve FIS H K)

Anchor rod			**M8**	**M8**	**-**	**M8**	**M10**	**M8**	**M10**	**-**	**M12**	**M16**	**M12**	**M16**
Internal threaded anchor FIS E			**-**	**-**	**M8** / **11x85**	**-**		**-**		**M10** **M12** / **15x85**	**-**		**-**	
Perforated sleeve FIS H K			**12x50**	**12x85**	**16x85**			**16x130**		**20x85**			**20x130**	
Anchor rod and internal threaded anchor FIS E with perforated sleeve FIS H K														
Max. installation torque	max T_{inst}	[Nm]		8		8		8	8	10	8	10	10	
General installation parameters														
Edge distance	c_{min}	[mm]	100											
Spacing	s_{min} ∥	[mm]	100											
	s_{cr} ∥	[mm]	240											
	s_{min} ⊥	[mm]	100											
	s_{cr} ⊥	[mm]	115											
Drilling method														
Hole drilling with rotary drill mode or hammer drilling with hard metal hammer drill														

Table C8.2: **Group factors**

Anchor rod			**M8**	**M8**	**-**	**M8**	**M10**	**M8**	**M10**	**-**	**M12**	**M16**	**M12**	**M16**
Internal threaded anchor FIS E			**-**	**-**	**M8** / **11x85**	**-**		**-**		**M10** **M12** / **15x85**	**-**		**-**	
Perforated sleeve FIS H K			**12x50**	**12x85**	**16x85**			**16x130**		**20x85**			**20x130**	
Group factors	$\alpha_{g,N}$ (s_{min} ∥)	[-]	1,14											
	$\alpha_{g,V}$ (s_{min} ∥)	[-]	1,51											
	$\alpha_{g,N}$ (s_{min} ⊥)	[-]	1,14											
	$\alpha_{g,V}$ (s_{min} ⊥)	[-]	1,54											

fischer injection system FIS V Zero for masonry

Performances
Perforated calcium silicate (sand-lime) brick KSL, 3DF, dimensions, installation parameters

Annex C 8

Electronic copy of the ETA by DIBt: ETA-21/0267

Perforated calcium silicate (sand-lime) brick KSL, 3DF, EN 771-2:2015

Table C9.1: Installation parameters
(Push through installation with perforated sleeve FIS H K)

Anchor rod			**M10**	**M12**	**M16**
Perforated sleeve FIS H K			**18x130/200**		**22x130/200**
Anchor rod with perforated sleeve FIS H K					
Max. installation torque	max T_{inst}	[Nm]	10		
General installation parameters					
Edge distance	c_{min}	[mm]	100		
Spacing	s_{min} ∥	[mm]	100		
	s_{cr} ∥	[mm]	240		
	s_{min} ⊥	[mm]	100		
	s_{cr} ⊥	[mm]	115		
Drilling method					
Hole drilling with rotary drill mode or hammer drilling with hard metal hammer drill					

Table C9.2: Group factors

Anchor rod			**M10**	**M12**	**M16**
Perforated sleeve FIS H K			**18x130/200**		**22x130/200**
Group factors	$\alpha_{g,N}$ (s_{min} ∥)	[-]	1,14		
	$\alpha_{g,V}$ (s_{min} ∥)	[-]	1,51		
	$\alpha_{g,N}$ (s_{min} ⊥)	[-]	1,14		
	$\alpha_{g,V}$ (s_{min} ⊥)	[-]	1,54		

fischer injection system FIS V Zero for masonry

Performances
Perforated calcium silicate (sand-lime) brick KSL, 3DF, dimensions, installation parameters

Annex C 9

Electronic copy of the ETA by DIBt: ETA-21/0267

Perforated calcium silicate (sand-lime) brick KSL, 3DF, EN 771-2:2015

Table C10.1: Characteristic resistance to pull-out failure or brick breakout failure of a single anchor under tension loading (Pre-positioned installation)

Anchor rod	**M8**	**M8**	**-**	**M8**	**M10**	**M8**	**M10**	**-**	**M12**	**M16**	**M12**	**M16**
Internal threaded anchor FIS E	-	-	**M8** / **11x85**	-		-		**M10** / **M12** / **15x85**	-		-	
Perforated sleeve FIS H K	**12x50**	**12x85**	**16x85**			**16x130**		**20x85**			**20x130**	
Tension resistance $N_{Rk} = N_{Rk,p} = N_{Rk,b} = N_{Rk,p,c} = N_{Rk,b,c}$ [kN] depending on the mean compressive strength f_b; Installation and use condition d/d; (temperature range 24/40°C)												
Mean compressive strength f_b												
6 N/mm²	1,2		0,9			2,0		0,9			2,0	
8 N/mm²	1,5		1,2			2,5		1,2			2,5	
10 N/mm²	1,5		1,5			3,0		1,5			3,0	
12 N/mm²	2,0		1,5			3,5		1,5			3,5	
16 N/mm²	2,5		2,0			4,5		2,0			4,5	
Tension resistance $N_{Rk} = N_{Rk,p} = N_{Rk,b} = N_{Rk,p,c} = N_{Rk,b,c}$ [kN] depending on the mean compressive strength f_b; Installation and use condition d/d; (temperature range 50/80°C and 72/120°C)												
Mean compressive strength f_b												
6 N/mm²	0.6		0.75			1.5		0.75			1.5	
8 N/mm²	0,75		0,9			2,0		0,9			2,0	
10 N/mm²	0,9		0,9			2,5		0,9			2,5	
12 N/mm²	0,9		1,2			2,5		1,2			2,5	
16 N/mm²	1,2		1,5			3,5		1,5			3,5	

Table C10.2: Characteristic resistance to pull-out failure or brick breakout failure of a single anchor under tension loading (Push through installation)

Anchor rod	**M10**	**M12**	**M16**
Perforated sleeve FIS H K	**18x130/200**		**22x130/200**
Tension resistance $N_{Rk} = N_{Rk,p} = N_{Rk,b} = N_{Rk,p,c} = N_{Rk,b,c}$ [kN] depending on the mean compressive strength f_b; Installation and use condition d/d; (temperature range 24/40°C)			
Mean compressive strength f_b			
6 N/mm²	2,0		
8 N/mm²	2,5		
10 N/mm²	3,0		
12 N/mm²	3,5		
16 N/mm²	4,5		
Tension resistance $N_{Rk} = N_{Rk,p} = N_{Rk,b} = N_{Rk,p,c} = N_{Rk,b,c}$ [kN] depending on the mean compressive strength f_b; Installation and use condition d/d; (temperature range 50/80°C and 72/120°C)			
Mean compressive strength f_b			
6 N/mm²	1,5		
8 N/mm²	2,0		
10 N/mm²	2,5		
12 N/mm²	2,5		
16 N/mm²	3,5		

Factor for job site tests see annex C16 and displacements see annex C17

fischer injection system FIS V Zero for masonry

Performances
Perforated calcium silicate (sand-lime) brick KSL, 3DF, Characteristic resistance under tension loading

Annex C 10

Electronic copy of the ETA by DIBt: ETA-21/0267

Perforated calcium silicate (sand-lime) brick KSL, 3DF, EN 771-2:2015

Table C11.1: Characteristic resistance to local brick failure or brick edge failure of a single anchor under shear loading (Pre-positioned installation)

Anchor rod	**M8**	**M8**	**-**	**M8**	**M10**	**M8**	**M10**	**-**		**M12**	**M16**	**M12**	**M16**
Internal threaded anchor FIS E	**-**	**-**	**M8** / **11x85**	**-**		**-**		**M10** / **15x85**	**M12**	**-**		**-**	
Perforated sleeve FIS H K	**12x50**	**12x85**	**16x85**			**16x130**		**20x85**				**20x130**	
Shear resistance $V_{Rk} = V_{Rk,b} = V_{Rk,c,II} = V_{Rk,c,\perp}$ [kN] depending on the mean compressive strength f_b; Installation and use condition d/d; (temperature range 24/40°C, 50/80°C and 72/120°C)													
Mean compressive strength f_b													
6 N/mm²	1,5		2,0					3,0					
8 N/mm²	2,0		2,5					3,5					
10 N/mm²	2,5		3,0					4,5					
12 N/mm²	2,5		3,5					5,0					
16 N/mm²	3,5		4,0					6,5					

Table C11.2: Characteristic resistance to local brick failure or brick edge failure of a single anchor under shear loading (Push through installation)

Anchor rod	**M10**	**M12**	**M16**
Perforated sleeve FIS H K	**18x130/200**		**22x130/200**
Shear resistance $V_{Rk} = V_{Rk,b} = V_{Rk,c,II} = V_{Rk,c,\perp}$ [kN] depending on the mean compressive strength f_b; Installation and use condition d/d; (temperature range 24/40°C, 50/80°C and 72/120°C)			
Mean compressive strength f_b			
6 N/mm²	2,0		3,0
8 N/mm²	2,5		3,5
10 N/mm²	3,0		4,5
12 N/mm²	3,5		5,0
16 N/mm²	4,0		6,5

Factor for job site tests see annex C16 and displacements see annex C17

Electronic copy of the ETA by DIBt: ETA-21/0267

Vertical perforated brick HLz, EN 771-1:2015

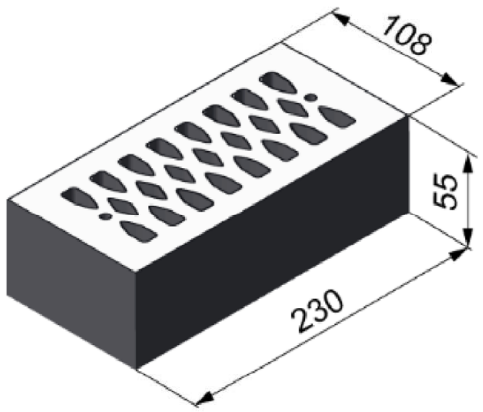

Vertical perforated brick HLz, EN 771-1:2015			
Producer	e.g. Wienerberger.		
Nominal dimensions [mm]	length L	width W	height H
	230	108	55
Mean gross dry density ρ [kg/dm³]	≥ 1,6		
Mean compressive strength [N/mm²]	8 / 10 / 12 / 16		
Standard	EN 771-1:2015		

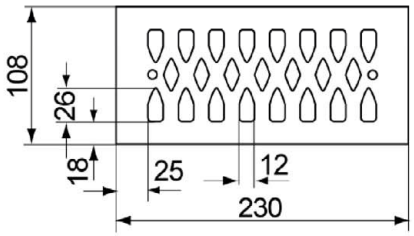

Dimensions see also Annex B 12

Table C12.1: Installation parameters

Anchor rod			**M8**	**M8**	**-**	**M8**	**M10**	**M8**	**M10**	**-**		**M12**	**M16**	**M12**	**M16**
Internal threaded anchor FIS E			**-**	**-**	**M8** / **11x85**	**-**		**-**		**M10** / **15x85**	**M12**	**-**		**-**	
Perforated sleeve FIS H K			**12x50**	**12x85**	**16x85**			**16x130**		**20x85**				**20x130**	
Anchor rod and internal threaded anchor FIS E with perforated sleeve FIS H K															
Max. installation torque	max T_{inst}	[Nm]	5												
General installation parameters															
Edge distance	c_{min}	[mm]	100												
Spacing	s_{min} ∥	[mm]	100												
	s_{cr} ∥	[mm]	230												
	s_{min} ⊥	[mm]	60												
	s_{cr} ⊥	[mm]	60												
Drilling method															
Hole drilling with rotary drill mode or hammer drilling with hard metal hammer drill															

Table C12.2: Group factors

Anchor rod			**M8**	**M8**	**-**	**M8**	**M10**	**M8**	**M10**	**-**		**M12**	**M16**	**M12**	**M16**
Internal threaded anchor FIS E			**-**	**-**	**M8** / **11x85**	**-**		**-**		**M10** / **15x85**	**M12**	**-**		**-**	
Perforated sleeve FIS H K			**12x50**	**12x85**	**16x85**			**16x130**		**20x85**				**20x130**	
Group factors	$\alpha_{g,N}$ (s_{min} ∥)	[-]	1,65												
	$\alpha_{g,V}$ (s_{min} ∥)	[-]	1,64												
	$\alpha_{g,N}$ (s_{min} ⊥)	[-]	1,65												
	$\alpha_{g,V}$ (s_{min} ⊥)	[-]	2,00												

fischer injection system FIS V Zero for masonry

Performances
Vertical perforated brick HLz, dimensions, installation parameters

Annex C 12

Electronic copy of the ETA by DIBt: ETA-21/0267

Vertical perforated brick HLz, EN 771-1:2015

Table C13.1: Characteristic resistance to pull-out failure or brick breakout failure of a single anchor under tension loading

Anchor rod	**M8**	**M8**	**-**	**M8**	**M10**	**M8**	**M10**	**-**		**M12**	**M16**	**M12**	**M16**
Internal threaded anchor FIS E	**-**	**-**	**M8**	**-**		**-**		**M10**	**M12**	**-**		**-**	
			11x85					**15x85**					
Perforated sleeve FIS H K	**12x50**	**12x85**	**16x85**			**16x130**		**20x85**				**20x130**	
Tension resistance $N_{Rk} = N_{Rk,p} = N_{Rk,b} = N_{Rk,p,c} = N_{Rk,b,c}$ [kN] depending on the mean compressive strength f_b; Installation and use condition d/d; (temperature range 24/40°C)													
Mean compressive strength f_b													
8 N/mm²	1,2	1,5	1,5			2,5		1,5				2,5	
10 N/mm²	1,2	2,0	2,0			2,5		2,0				2,5	
12 N/mm²	1,5	2,0	2,0			3,0		2,0				3,0	
16 N/mm²	1,5	2,5	2,5			3,5		2,5				3,5	
Tension resistance $N_{Rk} = N_{Rk,p} = N_{Rk,b} = N_{Rk,p,c} = N_{Rk,b,c}$ [kN] depending on the mean compressive strength f_b; Installation and use condition d/d; (temperature range 50/80°C and 72/120°C)													
Mean compressive strength f_b													
8 N/mm²	0,6	1,2	1,2			1,5		1,2				1,5	
10 N/mm²	0,75	1,2	1,2			2,0		1,2				2,0	
12 N/mm²	0,75	1,5	1,5			2,0		1,5				2,0	
16 N/mm²	0,9	1,5	1,5			2,5		1,5				2,5	

Table C13.2: Characteristic resistance to local brick failure or brick edge failure of a single anchor under shear loading

Anchor rod	**M8**	**M8**	**-**	**M8**	**M10**	**M8**	**M10**	**-**		**M12**	**M16**	**M12**	**M16**
Internal threaded anchor FIS E	**-**	**-**	**M8**	**-**		**-**		**M10**	**M12**	**-**		**-**	
			11x85					**15x85**					
Perforated sleeve FIS H K	**12x50**	**12x85**	**16x85**			**16x130**		**20x85**				**20x130**	
Shear resistance $V_{Rk} = V_{Rk,b} = V_{Rk,c,II} = V_{Rk,c,\perp}$ [kN] depending on the mean compressive strength f_b; Installation and use condition d/d; (temperature range 24/40°C, 50/80°C and 72/120°C)													
Mean compressive strength f_b													
8 N/mm²	2,0	3,5	2,5			3,5		2,5				3,5	
10 N/mm²	2,0	4,0	3,0			4,0		3,0				4,0	
12 N/mm²	2,0	4,0	3,0			4,5		3,0				4,5	
16 N/mm²	2,5	5,0	3,5			5,0		3,5				5,0	

Factor for job site tests see annex C16 and displacements see annex C17

fischer injection system FIS V Zero for masonry

Performances
Vertical perforated brick HLz, Characteristic resistance under tension and shear loading

Annex C 13

Electronic copy of the ETA by DIBt: ETA-21/0267

Lightweight aggregate concrete hollow block Hbl , EN 771-3:2015

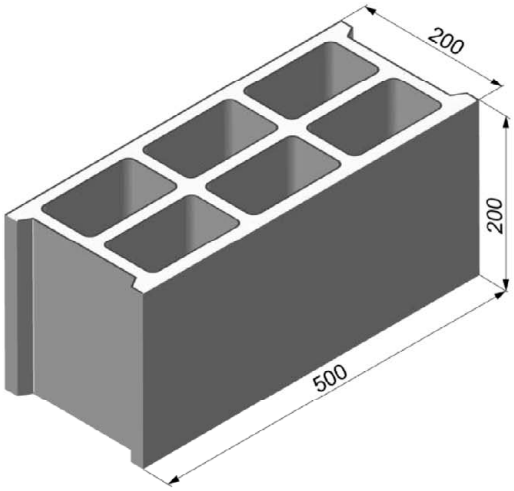

Lightweight aggregate concrete hollow block Hbl, EN 771-3:2015			
Producer	e.g. Sepa		
Nominal dimensions [mm]	length L	width W	height H
	500	200	200
Mean gross dry density ρ [kg/dm³]	≥ 1,0		
Mean compressive strength [N/mm²]	2 / 4		
Standard	EN 771-1:2015		

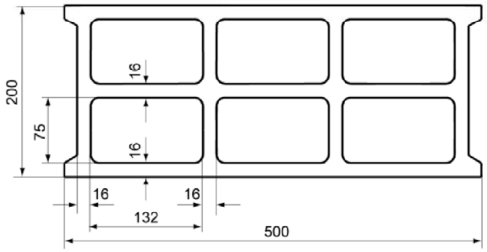

Dimensions see also Annex B 12

Table C14.1: Installation parameters

Anchor rod		**-**	**M8**	**M10**	**M8**	**M10**	**M10**	**M12**	**-**		**M12**	**M16**	**M12**	**M16**
Internal threaded anchor FIS E		**M8**	-		-		-		**M10**	**M12**	-		-	
		11x85							**15x85**					
Perforated sleeve FIS H K		**16x85**			**16x130**		**18x130/200**		**20x85**				**20x130**	
Anchor rod and internal threaded anchor FIS E with perforated sleeve FIS H K														
Max. installation torque	max T_{inst}	[Nm]	2											
General installation parameters														
Edge distance	c_{min}	[mm]	100											
Spacing	s_{min} ∥	[mm]	100											
	s_{cr} ∥	[mm]	500											
	s_{min} ⊥	[mm]	100											
	s_{cr} ⊥	[mm]	200											
Drilling method														
Hole drilling with rotary drill mode or hammer drilling with hard metal hammer drill														

Table C14.2: Group factors

Anchor rod		**-**	**M8**	**M10**	**M8**	**M10**	**M10**	**M12**	**-**		**M12**	**M16**	**M12**	**M16**
Internal threaded anchor FIS E		**M8**	-		-		-		**M10**	**M12**	-		-	
		11x85							**15x85**					
Perforated sleeve FIS H K		**16x85**			**16x130**		**18x130/200**		**20x85**				**20x130**	
Group factors	$\alpha_{g,N}$ (s_{min} ∥)	[-]	2,00											
	$\alpha_{g,V}$ (s_{min} ∥)	[-]	1,28											
	$\alpha_{g,N}$ (s_{min} ⊥)	[-]	1,40											
	$\alpha_{g,V}$ (s_{min} ⊥)	[-]	2,00											

fischer injection system FIS V Zero for masonry

Performances
Lightweight aggregate concrete hollow block Hbl, dimensions, installation parameters

Annex C 14

Electronic copy of the ETA by DIBt: ETA-21/0267

Lightweight aggregate concrete hollow block Hbl, EN 771-3:2015

Table C15.1: Characteristic resistance to pull-out failure or brick breakout failure of a single anchor under tension loading

Anchor rod	**-**	**M8**	**M10**	**M8**	**M10**	**M10**	**M12**	**-**		**M12**	**M16**	**M12**	**M16**
Internal threaded anchor FIS E	**M8**	**-**		**-**		**-**		**M10**	**M12**	**-**		**-**	
	11x85							**15x85**					
Perforated sleeve FIS H K	**16x85**			**16x130**		**18x130/200**		**20x85**				**20x130**	
Tension resistance $N_{Rk} = N_{Rk,p} = N_{Rk,b} = N_{Rk,p,c} = N_{Rk,b,c}$ [kN] depending on the mean compressive strength f_b; Installation and use condition d/d; (temperature range 24/40°C)													
Mean compressive strength f_b													
2 N/mm²	0,4											0,6	
4 N/mm²	0,5											0,75	
Tension resistance $N_{Rk} = N_{Rk,p} = N_{Rk,b} = N_{Rk,p,c} = N_{Rk,b,c}$ [kN] depending on the mean compressive strength f_b; Installation and use condition d/d; (temperature range 50/80°C and 72/120°C)													
Mean compressive strength f_b													
2 N/mm²	0,3											0,5	
4 N/mm²	0,4											0,6	

Table C15.2: Characteristic resistance to local brick failure or brick edge failure of a single anchor under shear loading

Anchor rod	**-**	**M8**	**M10**	**M8**	**M10**	**M10**	**M12**	**-**		**M12**	**M16**	**M12**	**M16**
Internal threaded anchor FIS E	**M8**	**-**		**-**		**-**		**M10**	**M12**	**-**		**-**	
	11x85							**15x85**					
Perforated sleeve FIS H K	**16x85**			**16x130**		**18x130/200**		**20x85**				**20x130**	
Shear resistance $V_{Rk} = V_{Rk,b} = V_{Rk,c,II} = V_{Rk,c,\perp}$ [kN] depending on the mean compressive strength f_b; Installation and use condition d/d; (temperature range 24/40°C, 50/80°C and 72/120°C)													
Mean compressive strength f_b													
2 N/mm²	1,5												
4 N/mm²	2,0												

Factor for job site tests see annex C16 and displacements see annex C17

fischer injection system FIS V Zero for masonry

Performances
Lightweight aggregate concrete hollow block Hbl
Characteristic resistance under tension and shear loading

Annex C 15

Electronic copy of the ETA by DIBt: ETA-21/0267

β-factors for job site tests

Table C16.1: β-factors for job site tests

Installation and use conditions	d/d		
temperature range [°C]	24/40	50/80	72/120
M8	0,81	0,47	0,45
M10	0,62	0,49	0,45
M12 / FIS E 11x85	0,62	0,49	0,52
M16 / FIS E 15x85	0,56	0,45	0,59

Electronic copy of the ETA by DIBt: ETA-21/0267

Table C17.1: Displacements

Material	Size	Effective embedment depth [mm]	N [kN]	δN_0 [mm]	δN_∞ [mm]	V [kN]	δV_0 [mm]	δV_∞ [mm]
Solid brick acc. to C4-C5	M8	50	0,57	0,00	0,00	0,71	0,08	0,12
		80	1,00	0,00	0,00	1,71	0,32	0,48
	M10	50	0,57	0,00	0,00	0,71	0,18	0,27
		80	1,00	0,01	0,02	1,71	0,50	0,75
	M12	50	1,29	0,03	0,06	0,71	0,05	0,08
		80	1,00	0,01	0,02	1,71	0,75	1,13
	M16	50	1,29	0,03	0,06	0,71	0,35	0,53
		80	1,71	0,04	0,08	1,71	0,20	0,30
Solid calcium silicate (sand-lime) brick acc. to C6-C7	M8	50	0,86	0,03	0,06	1,43	0,32	0,48
		80	0,86	0,00	0,00	1,43		
	M10	50	0,86	0,00	0,00	1,43	0,34	0,51
		80	1,71	0,02	0,04	1,43		
	M12	50	0,86	0,03	0,06	1,43	0,12	0,18
		80	1,71	0,04	0,08	1,43	0,32	0,48
	M16	50	0,86	0,03	0,06	1,43	0,57	0,86
		80	1,14	0,02	0,04	1,43	0,20	0,03
Perforated calcium silicate (sand-lime) brick acc. to C8-C11	M8	12x50	0,71	0,01	0,02	1,00	0,16	0,24
		12x85						
	M8 M10	16x85	0,57	0,02	0,04	1,14	0,57	0,86
		16x130	1,29	0,06	0,12	1,14	1,03	1,55
	M12 M16	20x85	0,57	0,03	0,06	1,86	1,15	1,73
		20x130	1,29	0,04	0,08	1,86	1,24	1,86
Perforated brick Hlz acc. to C12-C13	M8	12x50	0,43	0,00	0,00	0,71	0,25	0,38
		12x85	0,71	0,00	0,00	1,43	0,61	0,92
	M8 M10	16x85	0,71	0,03	0,06	1,00	0,36	0,54
		16x130	1,00	0,02	0,04	1,43	0,30	0,45
	M12 M16	20x85	0,71	0,00	0,00	1,00	0,22	0,33
		20x130	1,00	0,04	0,08	1,43	0,17	0,26
Lightweight aggregate concrete hollow block Hbl acc. to C14-C15	M8 M10	16x85	0,14	0,03	0,06	0,57	1,54	2,31
		16x130	0,14	0,02	0,04	0,57	1,01	1,52
	M12 M16	20x85	0,14	0,06	0,12	0,57	1,31	1,97
		20x130	0,21	0,04	0,08	0,57	0,82	1,23

fischer injection system FIS V Zero for masonry

Performances
displacements

Annex C 17

Electronic copy of the ETA by DIBt: ETA-21/0267